DRAWN	CHKD.	APPO.	DATE	MODIFICATIONS	REV. NO.
Anand	Sreenu	MVPR	01/12/23	CABLE TAGS UPDATED	F
Anand	RKB	MVPR	06/07/23	FWD THRUSTER ROOM DK-20 SPEAKER INCLUDED AND LOOPS RE-ARRANGED	E
Anand	Sreenu	TVNBS	11/04/23	Loops rearranged according to OEM comments	D
Anand	Sreenu	TVNBS	19/01/22	Loops and speakers are revised as per latest GA	C
					B
					A

HINDUSTAN SHIPYARD LTD
VISAKHAPATNAM

SCALE.- N.T.S

SHIP NO. 11190-91

DEPT.- E.D.O

SLD OF MB/SRE SYSTEM

DRAWING NO. 80304

PAGE NO.: 1 OF 14

SHIP NO	:11190-91
DRG. NO.	:80304F
SHEET NO	:02

RECOMMENDED CABLES:-

1. LAN (SIGNAL) CABLE : CAT6 SHIELDED ETHERNET CABLE WITH OVERALL SCREEN (SHIELD).
2. LS CABLE : 2X2X0.75SQMM TWISTED PAIR, 250V GRADE OVERALL SCREENED CABLE.
3. POWER CABLE : 2X2.5 SQMM, CONDUCTOR MULTI-STRAND ATC, CABLE.
4. INTEGRAL(SIGNAL) CABLE : 10X2X0.75SQMM TWISTED PAIR, 250V GRADE OVERALL SCREENED CABLE.
5. 8X2X0.5SQMM
6. RG59

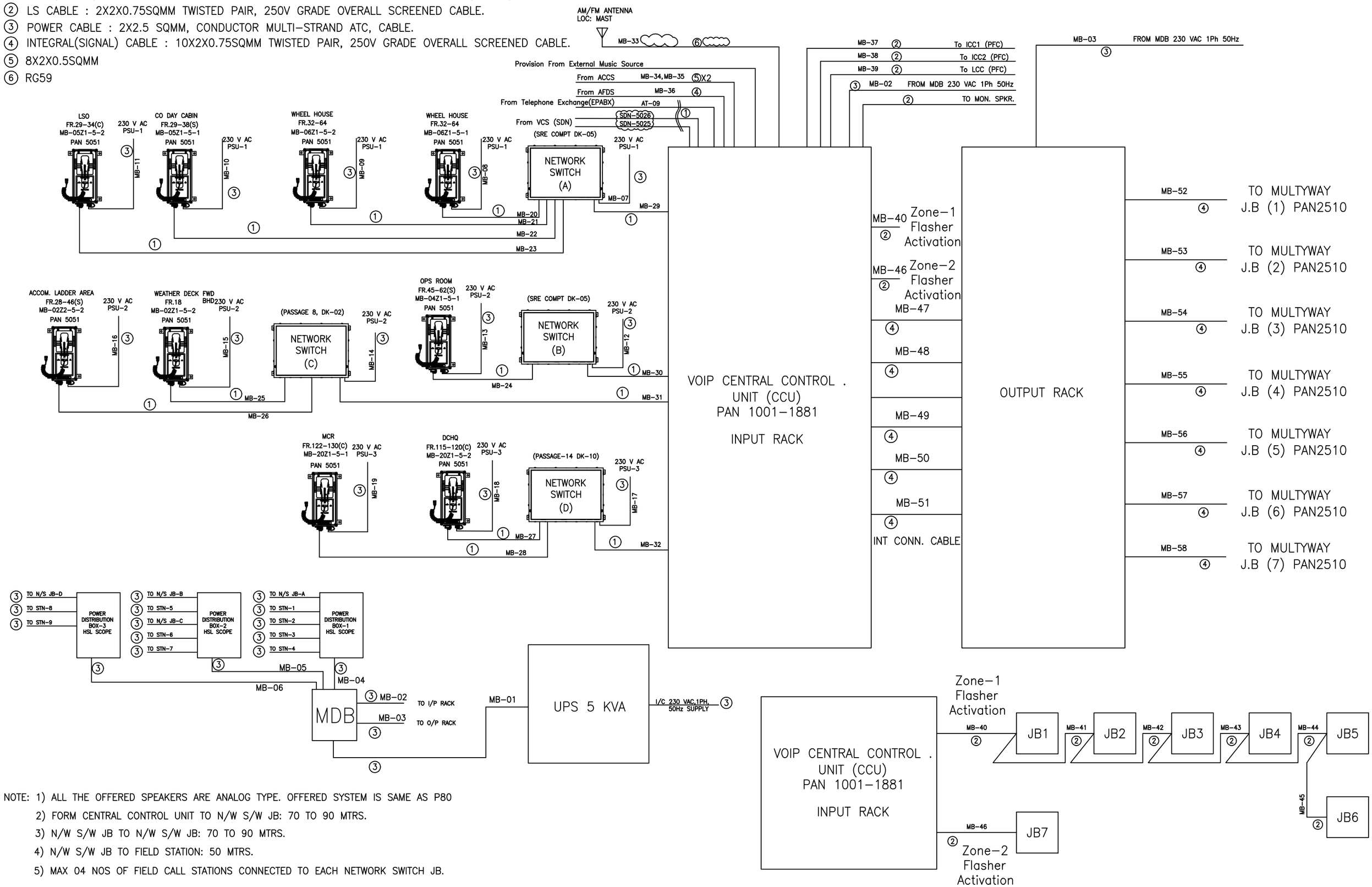

NOTE: 1) ALL THE OFFERED SPEAKERS ARE ANALOG TYPE. OFFERED SYSTEM IS SAME AS P80

2) FORM CENTRAL CONTROL UNIT TO N/W S/W JB: 70 TO 90 MTRS.

3) N/W S/W JB TO N/W S/W JB: 70 TO 90 MTRS.

4) N/W S/W JB TO FIELD STATION: 50 MTRS.

5) MAX 04 NOS OF FIELD CALL STATIONS CONNECTED TO EACH NETWORK SWITCH JB.

SHIP NO :11190-91
DRG. NO. :80304F
SHEET NO :03

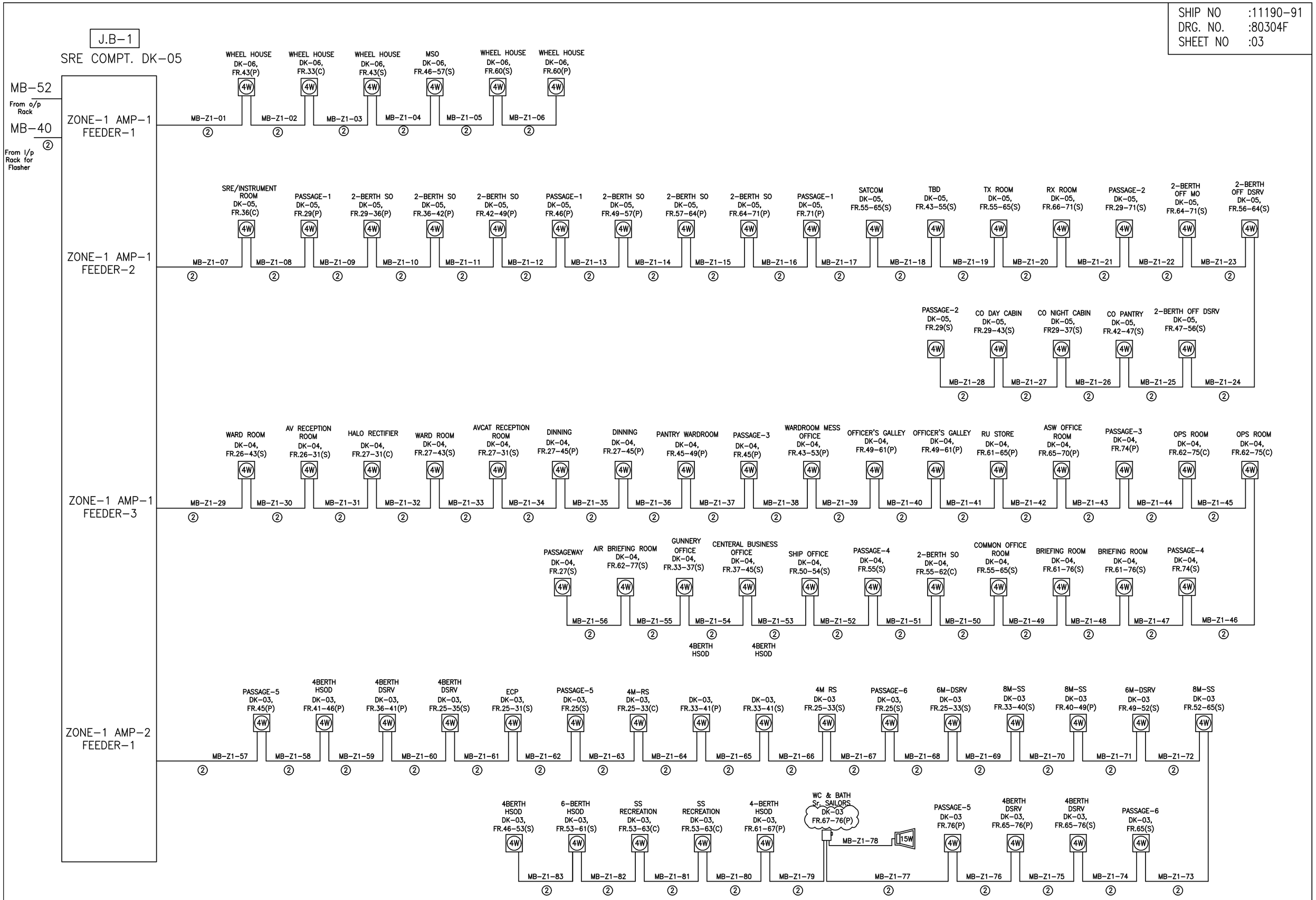

SHIP NO :11190-91
DRG. NO. :80304F
SHEET NO :04

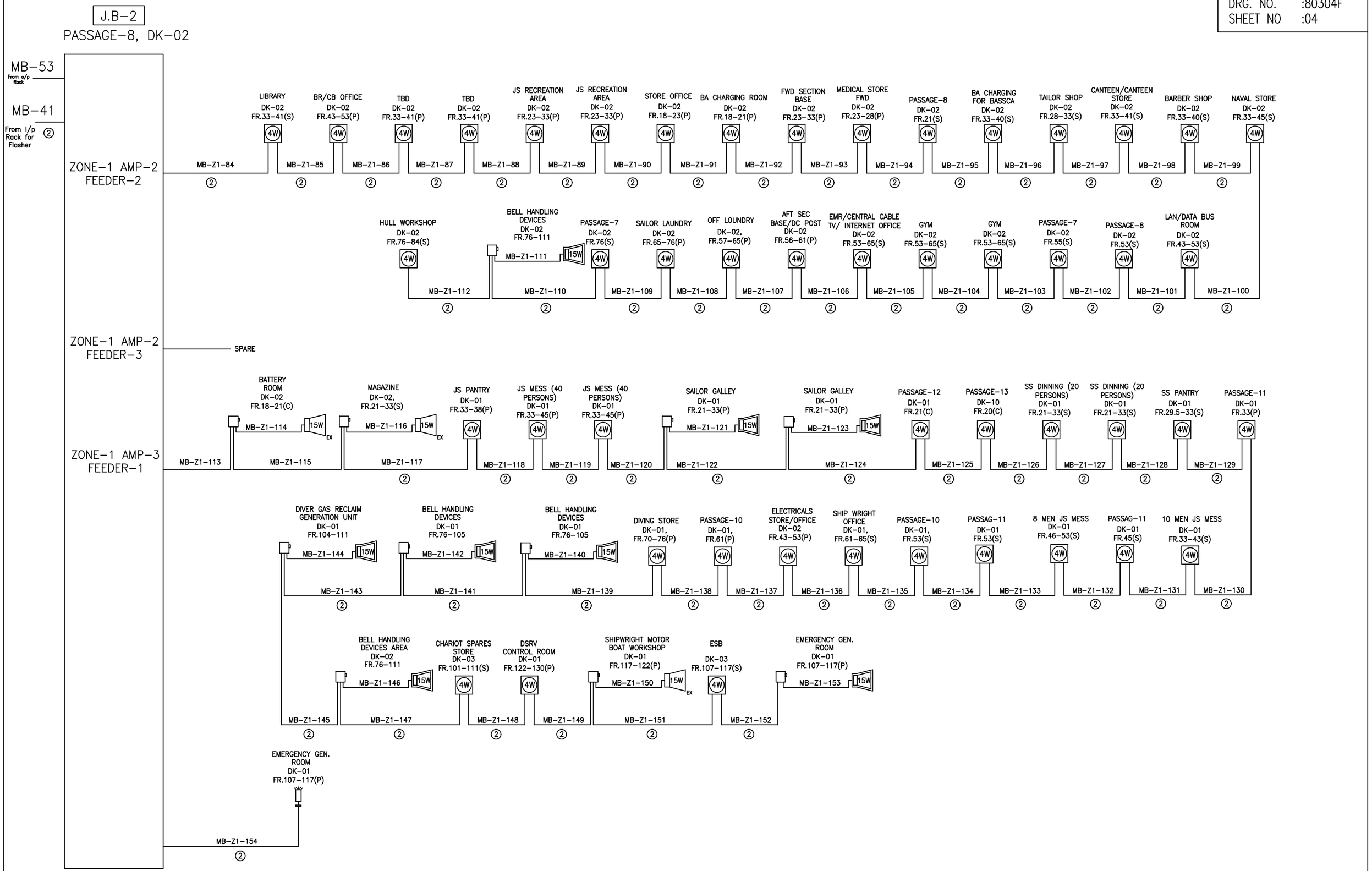

SHIP NO :11190-91
DRG. NO. :80304F
SHEET NO :05

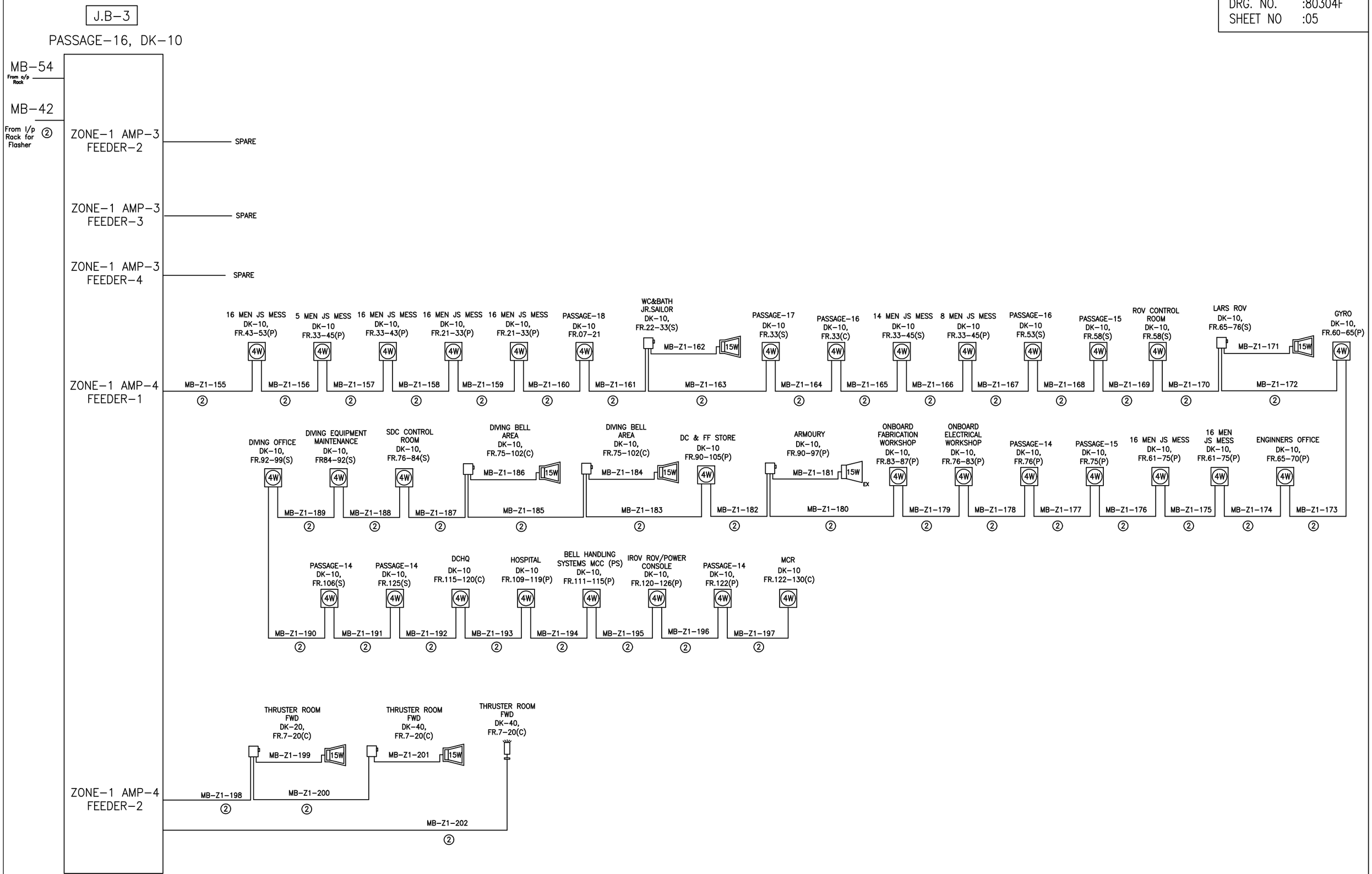

SHIP NO :11190-91
DRG. NO. :80304F
SHEET NO :06

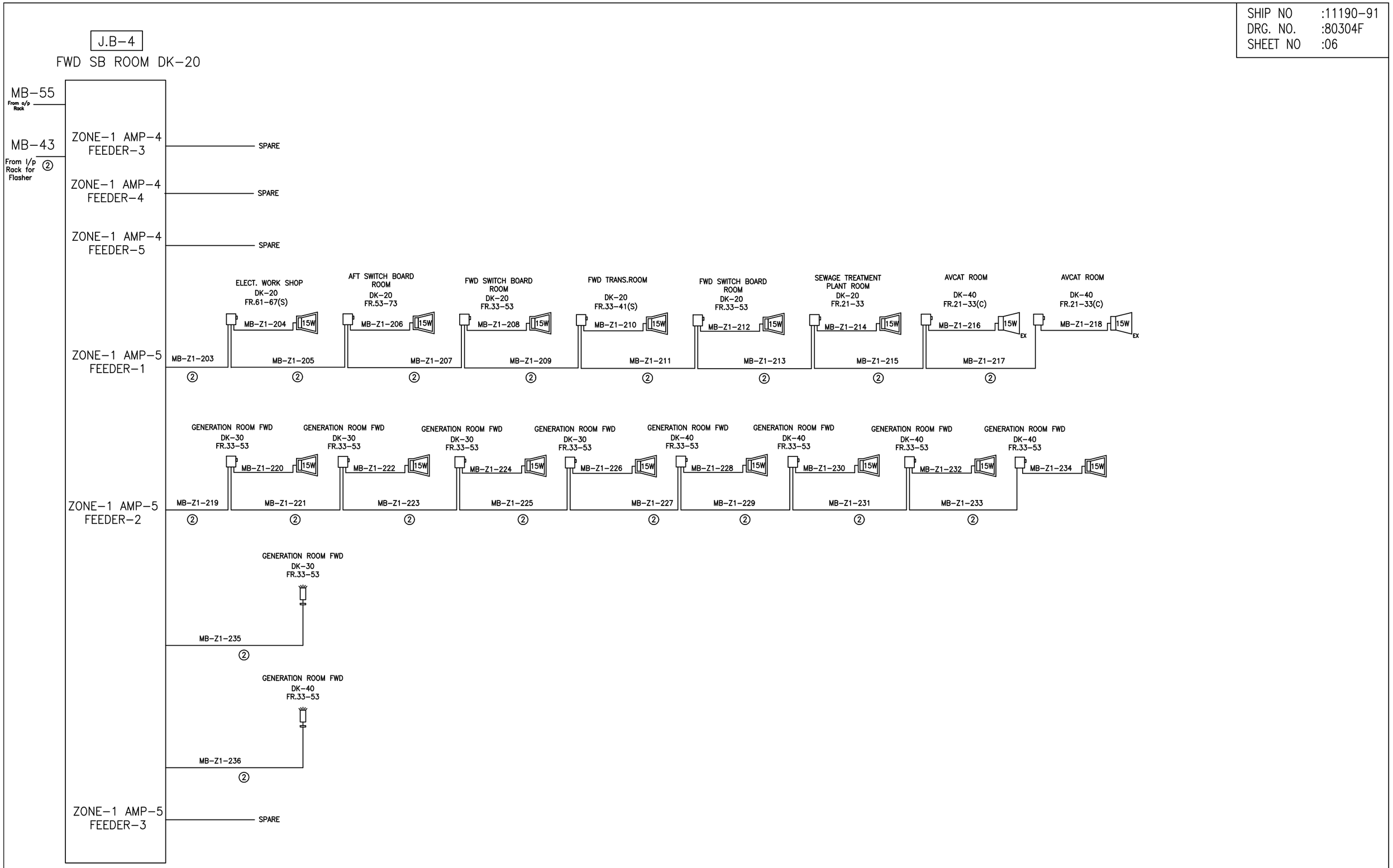

SHIP NO :11190-91
DRG. NO. :80304F
SHEET NO :07

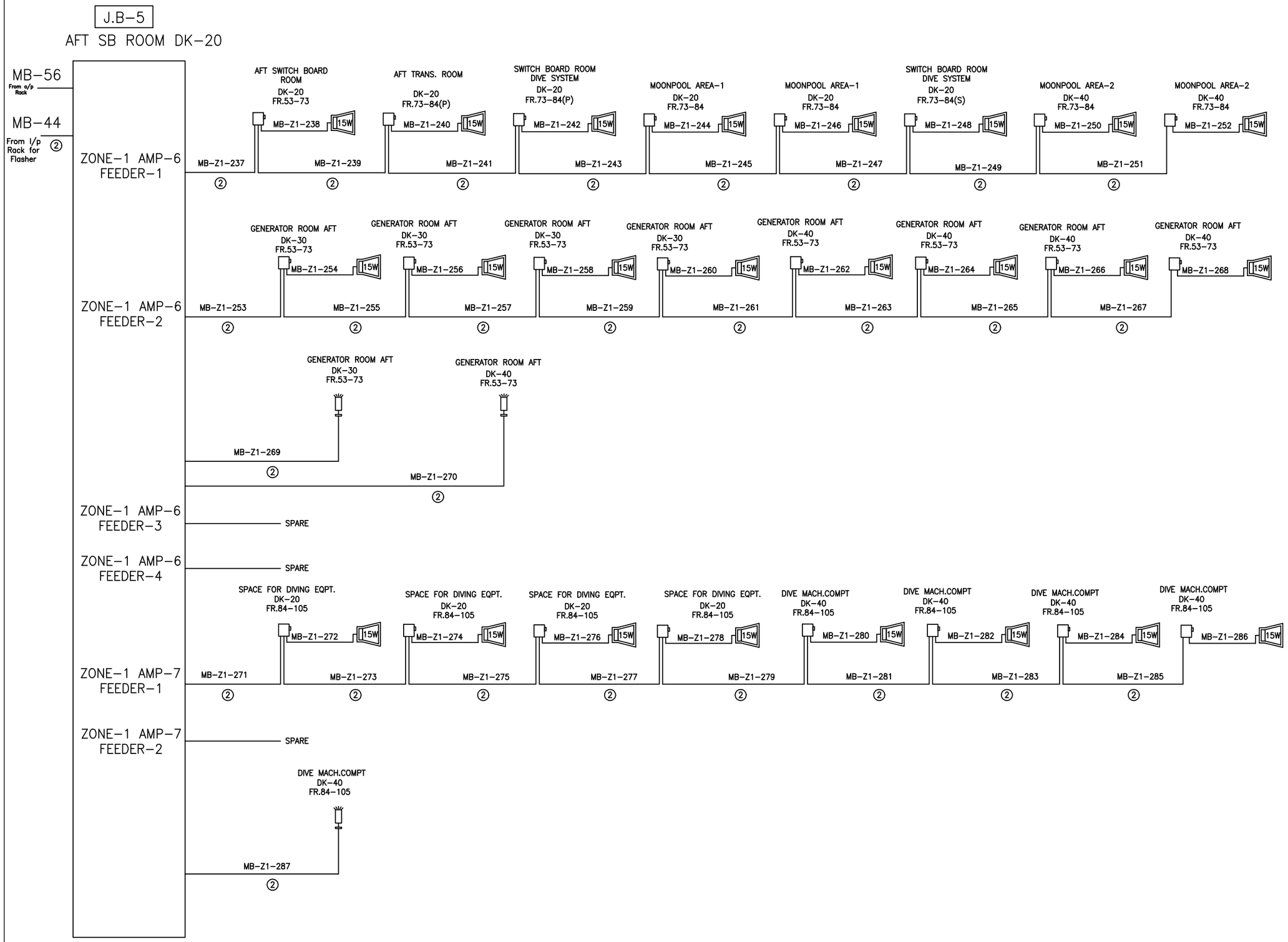

SHIP NO :11190-91
DRG. NO. :80304F
SHEET NO :08

J.B-6

SATURATION CONTROL ROOM, DK-20

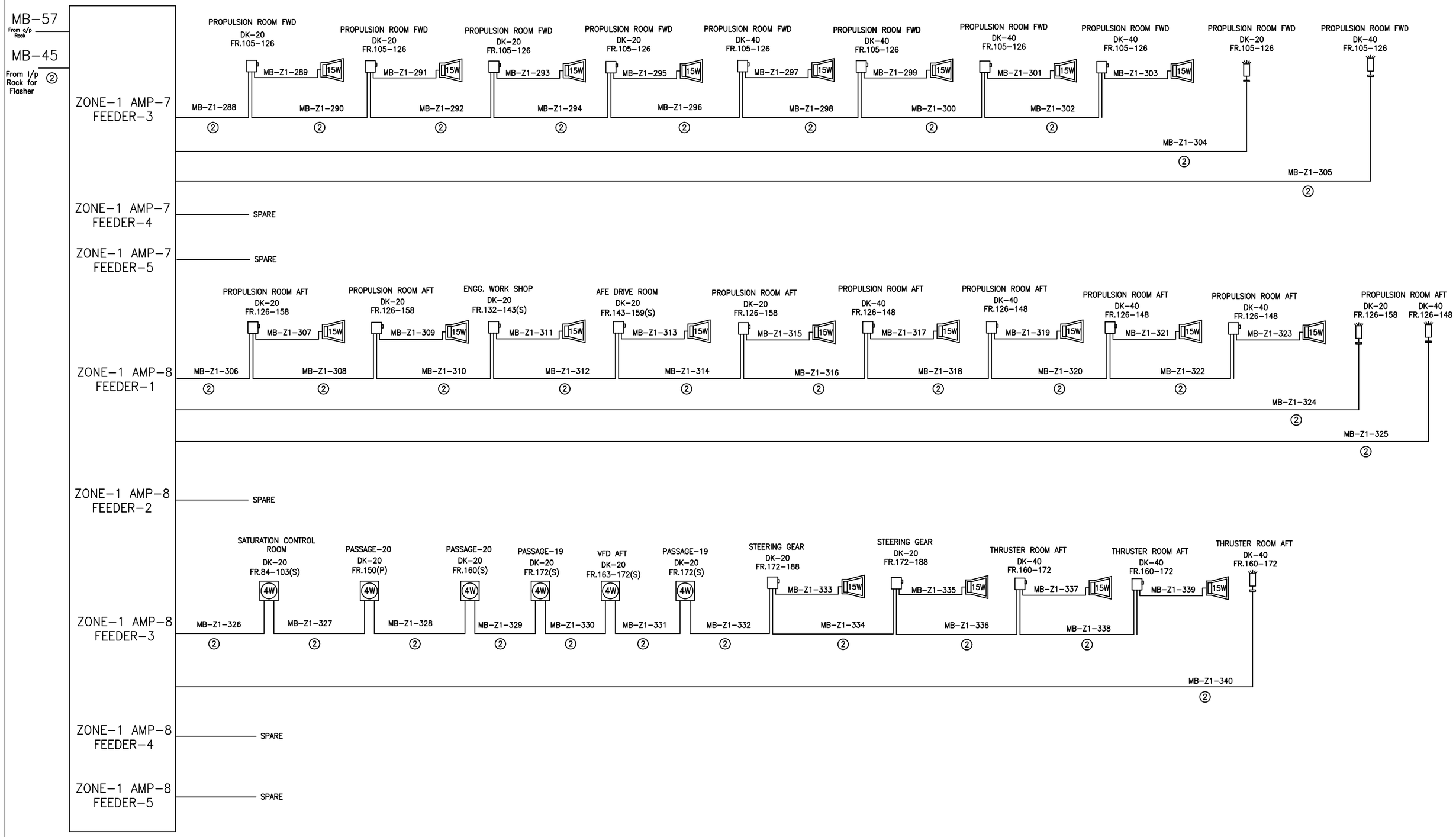

SHIP NO	:11190-91
DRG. NO.	:80304F
SHEET NO	:09

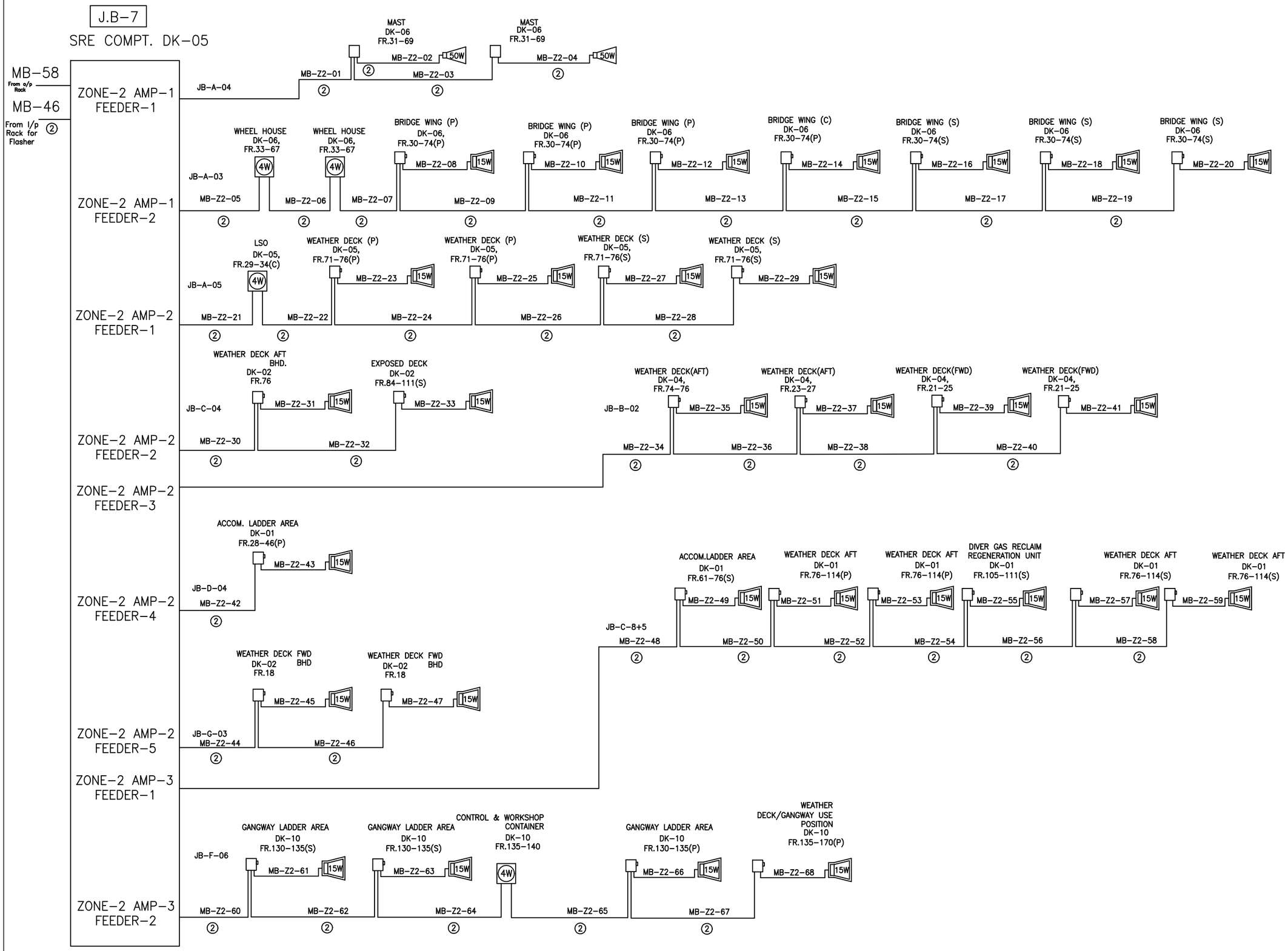

SHIP NO	:11190-91
DRG. NO.	:80304F
SHEET NO	:10

Eqpt No.	Symbol	Description	Qty
1	4W	Box Loudspeaker 4W(NWT) with Volume Control; PAN9625	172 NOS
2		Horn Loudspeaker (15W) + Volume Control Unit; PAN9621 + PAN7409	104 NOS
3	15W EX	Horn Loudspeaker (Blastproof & Dustproof); PAN9621/M + PAN7409	6 NOS
4		Horn Speaker 50W; DH50	2 NOS
5		Wall Mounted Handset Station; PAN5051	9 NOS
6		Handset with Plug; PAN8512	9 NOS
7		Flasher (COTS Item); FLASH-1881	12 NOS
8	JUNCTION BOX	Network Switch 8 Port with Enclosure; SWITCH-1881	4 NOS
9		CENTRAL CONTROL UNIT	1 SET
10		AMPLIFIER RACK	
11		Multiway Junction Box; PAN2510	7 NOS
12		Stowage Box for Mic/ Handset; PAN1510	5 NOS
13	UPS	UPS; UPS-1881	1 NO

MBSRE 4W SPEAKER

ISO VIEW

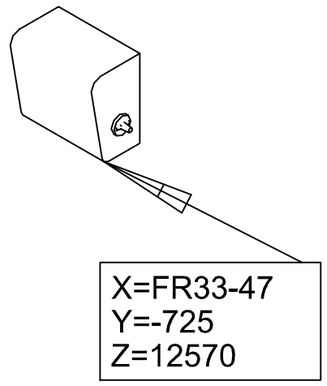

PLAN VIEW

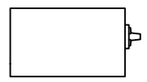

RHS VIEW

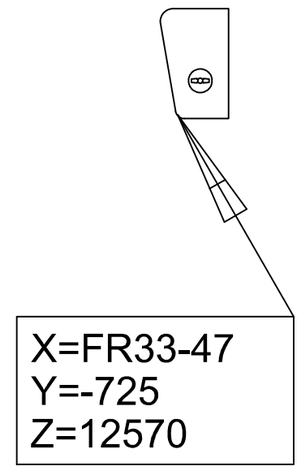

NOTE: Rest all equipment are given to the center of the equipment

SHIP NO :11190-91
DRG. NO. :80304F
SHEET NO :11

Name	Description	SHIP X	SHIP Y	SHIP Z
MB-Z1-01	MBSRE 4W SPEAKER	FR44 - 22mm	7817.78	29912.17
MB-Z1-02	MBSRE 4W SPEAKER	FR32 - 120mm	-70.00	29912.17
MB-Z1-03	MBSRE 4W SPEAKER	FR44 - 128mm	-7711.71	29912.17
MB-Z1-04	MBSRE 4W SPEAKER	FR46 - 120mm	-2330.00	29912.17
MB-Z1-05	MBSRE 4W SPEAKER	FR59 - 90mm	-6400.00	29912.17
MB-Z1-06	MBSRE 4W SPEAKER	FR59 + 75mm	6400.00	29912.17
MB-Z1-07	MBSRE 4W SPEAKER	FR38 - 115mm	3393.66	26812.17
MB-Z1-08	MBSRE 4W SPEAKER	FR29 - 185mm	4063.66	27032.17
MB-Z1-09	MBSRE 4W SPEAKER	FR30 - 135mm	7963.66	26662.17
MB-Z1-10	MBSRE 4W SPEAKER	FR38 + 15mm	11063.66	26662.17
MB-Z1-11	MBSRE 4W SPEAKER	FR42 - 105mm	8013.66	26662.17
MB-Z1-12	MBSRE 4W SPEAKER	FR44 - 155mm	3163.66	26662.17
MB-Z1-13	MBSRE 4W SPEAKER	FR53 - 70mm	6163.66	26662.17
MB-Z1-14	MBSRE 4W SPEAKER	FR57 - 150mm	7513.66	26662.17
MB-Z1-15	MBSRE 4W SPEAKER	FR67 + 65mm	11063.66	26662.17
MB-Z1-16	MBSRE 4W SPEAKER	FR71 + 150mm	4113.66	27037.17
MB-Z1-17	MBSRE 4W SPEAKER	FR56 - 165mm	1743.66	26662.17
MB-Z1-18	MBSRE 4W SPEAKER	FR46 - 265mm	-3356.34	26662.17
MB-Z1-19	MBSRE 4W SPEAKER	FR58 + 85mm	-3356.34	26662.17
MB-Z1-20	MBSRE 4W SPEAKER	FR68 - 115mm	-3356.34	26662.17
MB-Z1-21	MBSRE 4W SPEAKER	FR71 + 150mm	-4088.66	27037.17
MB-Z1-22	MBSRE 4W SPEAKER	FR70 - 285mm	-8786.34	26662.17
MB-Z1-23	MBSRE 4W SPEAKER	FR56 - 135mm	-7336.34	26662.17
MB-Z1-24	MBSRE 4W SPEAKER	FR47 - 85mm	-7336.34	26662.17
MB-Z1-25	MBSRE 4W SPEAKER	FR44 + 215mm	-8036.34	26662.17
MB-Z1-26	MBSRE 4W SPEAKER	FR32 - 235mm	-10986.34	26662.17
MB-Z1-27	MBSRE 4W SPEAKER	FR39 + 65mm	-8871.34	26662.17
MB-Z1-28	MBSRE 4W SPEAKER	FR29 - 185mm	-4208.66	27037.17
MB-Z1-29	MBSRE 4W SPEAKER	FR42 - 285mm	700.00	23873.17
MB-Z1-30	MBSRE 4W SPEAKER	FR29 + 65mm	-1936.34	23873.17
MB-Z1-31	MBSRE 4W SPEAKER	FR29 + 65mm	493.66	23873.17
MB-Z1-32	MBSRE 4W SPEAKER	FR31 - 135mm	650.00	23873.17
MB-Z1-33	MBSRE 4W SPEAKER	FR31 + 165mm	1993.66	23873.17
MB-Z1-34	MBSRE 4W SPEAKER	FR28 + 15mm	8163.66	23873.17
MB-Z1-35	MBSRE 4W SPEAKER	FR45 + 215mm	8163.66	23873.17
MB-Z1-36	MBSRE 4W SPEAKER	FR45 - 135mm	6863.66	23873.17
MB-Z1-37	MBSRE 4W SPEAKER	FR45 - 150mm	4143.66	24523.17
MB-Z1-38	MBSRE 4W SPEAKER	FR48	1893.66	23873.17
MB-Z1-39	MBSRE 4W SPEAKER	FR49 - 265mm	7173.66	23873.17
MB-Z1-40	MBSRE 4W SPEAKER	FR61 + 205mm	7323.66	23873.17
MB-Z1-41	MBSRE 4W SPEAKER	FR65 + 205mm	6073.66	23873.17
MB-Z1-42	MBSRE 4W SPEAKER	FR67 + 55mm	11073.66	23873.17
MB-Z1-43	MBSRE 4W SPEAKER	FR74 + 172mm	4250.00	24180.00
MB-Z1-44	MBSRE 4W SPEAKER	FR73 - 285mm	-586.34	23873.17
MB-Z1-45	MBSRE 4W SPEAKER	FR62 - 135mm	-1336.34	23873.17
MB-Z1-46	MBSRE 4W SPEAKER	FR74 + 172mm	-4100.00	24180.00
MB-Z1-47	MBSRE 4W SPEAKER	FR76 + 165mm	-8100.00	23873.17
MB-Z1-48	MBSRE 4W SPEAKER	FR61 - 200mm	-8100.00	23873.17
MB-Z1-49	MBSRE 4W SPEAKER	FR57 - 235mm	-4936.34	23873.17

Name	Description	SHIP X	SHIP Y	SHIP Z
MB-Z1-50	MBSRE 4W SPEAKER	FR59 + 115mm	-3336.34	23873.17
MB-Z1-51	MBSRE 4W SPEAKER	FR54 + 115mm	-4686.34	23873.17
MB-Z1-52	MBSRE 4W SPEAKER	FR52 - 115mm	-9421.34	23873.17
MB-Z1-53	MBSRE 4W SPEAKER	FR45 + 185mm	-8100.00	23873.17
MB-Z1-54	MBSRE 4W SPEAKER	FR37 + 135mm	-8100.00	23873.17
MB-Z1-55	MBSRE 4W SPEAKER	FR27 - 265mm	-8100.00	23873.17
MB-Z1-56	MBSRE 4W SPEAKER	FR27 - 200mm	-4100.00	24280.00
MB-Z1-57	MBSRE 4W SPEAKER	FR46 + 250mm	5175.00	21063.17
MB-Z1-58	MBSRE 4W SPEAKER	FR48 + 200mm	7900.00	21063.17
MB-Z1-59	MBSRE 4W SPEAKER	FR42 + 100mm	6925.00	21063.17
MB-Z1-60	MBSRE 4W SPEAKER	FR36 - 300mm	7025.00	21063.17
MB-Z1-61	MBSRE 4W SPEAKER	FR26 + 150mm	7870.00	21063.17
MB-Z1-62	MBSRE 4W SPEAKER	FR25 - 180mm	4260.00	21453.17
MB-Z1-63	MBSRE 4W SPEAKER	FR30 + 150mm	40.00	21063.17
MB-Z1-64	MBSRE 4W SPEAKER	FR37 + 250mm	45.00	21063.17
MB-Z1-65	MBSRE 4W SPEAKER	FR41 + 250mm	-1750.00	21063.17
MB-Z1-66	MBSRE 4W SPEAKER	FR25 - 150mm	-1710.00	21063.17
MB-Z1-67	MBSRE 4W SPEAKER	FR25 - 180mm	-4445.00	21453.17
MB-Z1-68	MBSRE 4W SPEAKER	FR25 - 250mm	-7350.00	21063.17
MB-Z1-69	MBSRE 4W SPEAKER	FR41 - 250mm	-7700.00	21063.17
MB-Z1-70	MBSRE 4W SPEAKER	FR42 + 100mm	-7200.00	21063.17
MB-Z1-71	MBSRE 4W SPEAKER	FR53 + 75mm	-6225.00	21063.17
MB-Z1-72	MBSRE 4W SPEAKER	FR63 + 75mm	-11075.00	21063.17
MB-Z1-73	MBSRE 4W SPEAKER	FR65 + 110mm	-4725.00	21063.17
MB-Z1-74	MBSRE 4W SPEAKER	FR68 - 300mm	-4000.00	21063.17
MB-Z1-75	MBSRE 4W SPEAKER	FR69 - 150mm	2850.00	21063.17
MB-Z1-76	MBSRE 4W SPEAKER	FR76 + 170mm	4010.00	21388.17
MB-Z1-77	VOLUME CONTROLLER	FR70 + 150mm	5080.00	20819.50
MB-Z1-78	15W MBSRE SPEAKER	FR71 - 200mm	5161.00	21247.00
MB-Z1-79	MBSRE 4W SPEAKER	FR67 + 100mm	9450.00	21063.17
MB-Z1-80	MBSRE 4W SPEAKER	FR53 - 100mm	1350.00	21063.17
MB-Z1-81	MBSRE 4W SPEAKER	FR53 - 100mm	-1650.00	21063.17
MB-Z1-82	MBSRE 4W SPEAKER	FR55 + 250mm	6600.00	21063.17
MB-Z1-83	MBSRE 4W SPEAKER	FR48 - 50mm	6300.00	21063.17
MB-Z1-84	MBSRE 4W SPEAKER	FR37 + 150mm	-1050.00	18064.17
MB-Z1-85	MBSRE 4W SPEAKER	FR48 - 50mm	4665.00	18064.17
MB-Z1-86	MBSRE 4W SPEAKER	FR33 - 100mm	8705.00	18064.17
MB-Z1-87	MBSRE 4W SPEAKER	FR33 - 100mm	5605.00	18064.17
MB-Z1-88	MBSRE 4W SPEAKER	FR29 + 200mm	11370.00	18064.17
MB-Z1-89	MBSRE 4W SPEAKER	FR28 + 100mm	4880.00	18064.17
MB-Z1-90	MBSRE 4W SPEAKER	FR18 - 100mm	7410.00	18064.17
MB-Z1-91	MBSRE 4W SPEAKER	FR21 + 150mm	4340.00	18064.17
MB-Z1-92	MBSRE 4W SPEAKER	FR23 - 100mm	3240.00	18164.17
MB-Z1-93	MBSRE 4W SPEAKER	FR26 - 100mm	-1046.00	18164.17
MB-Z1-94	MBSRE 4W SPEAKER	FR21 - 100mm	-2070.00	18444.17
MB-Z1-95	MBSRE 4W SPEAKER	FR26 + 100mm	-3145.00	18064.17
MB-Z1-96	MBSRE 4W SPEAKER	FR31 + 150mm	-3145.00	18064.17
MB-Z1-97	MBSRE 4W SPEAKER	FR40 + 150mm	-4350.00	18064.17
MB-Z1-98	MBSRE 4W SPEAKER	FR36 - 200mm	-8309.00	18064.17
MB-Z1-99	MBSRE 4W SPEAKER	FR41 + 250mm	-8500.00	18064.17

Name	Description	SHIP X	SHIP Y	SHIP Z
MB-Z1-100	MBSRE 4W SPEAKER	FR49 - 250mm	-5540.00	18064.17
MB-Z1-101	MBSRE 4W SPEAKER	FR53 + 150mm	-1970.00	18394.17
MB-Z1-102	MBSRE 4W SPEAKER	FR54 - 300mm	-4100.00	18554.17
MB-Z1-103	MBSRE 4W SPEAKER	FR61 + 150mm	-3150.00	18164.17
MB-Z1-104	MBSRE 4W SPEAKER	FR53 - 100mm	-6580.00	18164.17
MB-Z1-105	MBSRE 4W SPEAKER	FR61	-2900.00	18164.17
MB-Z1-106	MBSRE 4W SPEAKER	FR58 - 300mm	4110.00	18164.17
MB-Z1-107	MBSRE 4W SPEAKER	FR65 + 100mm	8215.00	18164.17
MB-Z1-108	MBSRE 4W SPEAKER	FR70 + 150mm	6165.00	18164.17
MB-Z1-109	MBSRE 4W SPEAKER	FR76 + 200mm	5115.00	18414.17
MB-Z1-110	VOLUME CONTROLLER	FR76 - 100mm	0.00	17820.00
MB-Z1-111	15W MBSRE SPEAKER	FR76 - 250mm	0.00	18400.00
MB-Z1-112	MBSRE 4W SPEAKER	FR80 - 50mm	-4295.00	18414.17
MB-Z1-113	VOLUME CONTROLLER	FR18 - 100mm	292.00	17820.50
MB-Z1-114	MBSRE Ex-PROOF SPEAKER	FR19 + 295mm	592.00	18400.00
MB-Z1-115	VOLUME CONTROLLER	FR21 - 100mm	-9500.00	17820.50
MB-Z1-116	MBSRE Ex-PROOF SPEAKER	FR21 - 295mm	-9500.00	18400.00
MB-Z1-117	MBSRE 4W SPEAKER	FR35 - 150mm	250.00	15064.17
MB-Z1-118	MBSRE 4W SPEAKER	FR33 - 150mm	6900.00	15064.17
MB-Z1-119	MBSRE 4W SPEAKER	FR40 + 260mm	10900.00	15064.17
MB-Z1-120	VOLUME CONTROLLER	FR29 + 50mm	250.00	14829.50
MB-Z1-121	15W MBSRE SPEAKER	FR27	335.00	15400.00
MB-Z1-122	VOLUME CONTROLLER	FR22 + 250mm	5675.00	14829.50
MB-Z1-123	15W MBSRE SPEAKER	FR22 + 200mm	4575.00	15400.00
MB-Z1-124	MBSRE 4W SPEAKER	FR21 - 200mm	-650.00	15414.17
MB-Z1-125	MBSRE 4W SPEAKER	FR14 - 300mm	-2885.00	15064.17
MB-Z1-126	MBSRE 4W SPEAKER	FR21 - 100mm	-6335.00	15064.17
MB-Z1-127	MBSRE 4W SPEAKER	FR29 + 100mm	-5235.00	15064.17
MB-Z1-128	MBSRE 4W SPEAKER	FR30 + 145mm	-2020.00	15064.17
MB-Z1-129	MBSRE 4W SPEAKER	FR33 - 150mm	-800.00	15404.17
MB-Z1-130	MBSRE 4W SPEAKER	FR41 - 150mm	-5900.00	15064.17
MB-Z1-131	MBSRE 4W SPEAKER	FR45 + 200mm	-8900.00	15404.17
MB-Z1-132	MBSRE 4W SPEAKER	FR46 - 150mm	-5735.00	15064.17
MB-Z1-133	MBSRE 4W SPEAKER	FR53 + 175mm	-1690.00	15424.17
MB-Z1-135	MBSRE 4W SPEAKER	FR65 + 100mm	-5170.00	15064.17
MB-Z1-136	MBSRE 4W SPEAKER	FR57 + 175mm	1650.00	15064.17
MB-Z1-137	MBSRE 4W SPEAKER	FR61 - 100mm	5070.00	15064.17
MB-Z1-138	MBSRE 4W SPEAKER	FR70 - 100mm	7500.00	15064.17
MB-Z1-139	VOLUME CONTROLLER	FR104 + 100mm	650.00	14829.50
MB-Z1-140	15W MBSRE SPEAKER	FR103 - 250mm	1470.00	15265.00
MB-Z1-141	VOLUME CONTROLLER	FR104 + 100mm	-1850.00	14829.50
MB-Z1-142	15W MBSRE SPEAKER	FR103 - 250mm	-2020.00	15265.00
MB-Z1-143	VOLUME CONTROLLER	FR107 + 70mm	-50.00	14829.50
MB-Z1-144	15W MBSRE SPEAKER	FR108 - 100mm	-300.00	15400.00
MB-Z1-145	VOLUME CONTROLLER	FR111 + 100mm	0.00	17820.00
MB-Z1-146	15W MBSRE SPEAKER	FR111 + 250mm	0.00	18100.00
MB-Z1-147	MBSRE 4W SPEAKER	FR106 - 240mm	-3235.00	21063.17
MB-Z1-148	MBSRE 4W SPEAKER	FR130 + 100mm	1400.00	15064.17
MB-Z1-149	VOLUME CONTROLLER	FR117 - 65mm	1150.00	14829.50
MB-Z1-150	MBSRE Ex-PROOF SPEAKER	FR117 - 220mm	2100.00	15295.67

SHIP NO :11190-91
DRG. NO. :80304F
SHEET NO :12

Name	Description	SHIP X	SHIP Y	SHIP Z
MB-Z1-151	MBSRE 4W SPEAKER	FR114 - 100mm	4050.00	15064.17
MB-Z1-152	VOLUME CONTROLLER	FR115 - 100mm	4425.00	14829.50
MB-Z1-153	15W MBSRE SPEAKER	FR114 - 300mm	4475.00	15800.00
MB-Z1-154	MSBSRE FLASH LIGHT	FR114 - 300mm	4425.00	16550.00
MB-Z1-155	MBSRE 4W SPEAKER	FR52 - 210mm	2400.00	12064.17
MB-Z1-156	MBSRE 4W SPEAKER	FR40 - 300mm	2025.00	12064.17
MB-Z1-157	MBSRE 4W SPEAKER	FR33 - 115mm	7530.00	12284.17
MB-Z1-158	MBSRE 4W SPEAKER	FR28 + 150mm	120.00	12014.17
MB-Z1-159	MBSRE 4W SPEAKER	FR21 - 200mm	3475.00	12150.00
MB-Z1-160	MBSRE 4W SPEAKER	FR13 - 100mm	-100.00	12200.00
MB-Z1-161	VOLUME CONTROLLER	FR28 + 250mm	-2950.00	11350.00
MB-Z1-162	15W MBSRE SPEAKER	FR26 - 50mm	-3100.00	12208.00
MB-Z1-163	MBSRE 4W SPEAKER	FR33 + 215mm	-575.00	12520.00
MB-Z1-164	MBSRE 4W SPEAKER	FR33 - 115mm	-725.00	12570.00
MB-Z1-165	MBSRE 4W SPEAKER	FR45 + 150mm	-4480.00	12064.17
MB-Z1-166	MBSRE 4W SPEAKER	FR45 + 250mm	-9030.00	12064.17
MB-Z1-167	MBSRE 4W SPEAKER	FR53 + 200mm	-5825.00	12064.17
MB-Z1-168	MBSRE 4W SPEAKER	FR58 - 50mm	-7600.00	12064.17
MB-Z1-169	MBSRE 4W SPEAKER	FR60 - 150mm	-5645.00	12064.17
MB-Z1-170	VOLUME CONTROLLER	FR65 - 250mm	-3580.00	11900.00
MB-Z1-171	15W MBSRE SPEAKER	FR66 + 200mm	-3530.00	12450.00
MB-Z1-172	MBSRE 4W SPEAKER	FR60 - 100mm	695.00	12064.17
MB-Z1-173	MBSRE 4W SPEAKER	FR65 - 160mm	2025.00	12064.17
MB-Z1-174	MBSRE 4W SPEAKER	FR61 - 100mm	8635.00	12064.17
MB-Z1-175	MBSRE 4W SPEAKER	FR76 + 100mm	8435.00	12344.17
MB-Z1-176	MBSRE 4W SPEAKER	FR76 + 85mm	5070.00	12519.17
MB-Z1-177	MBSRE 4W SPEAKER	FR76 - 85mm	5070.00	12519.17
MB-Z1-178	MBSRE 4W SPEAKER	FR79 - 100mm	11115.00	12064.17
MB-Z1-179	MBSRE 4W SPEAKER	FR82 - 100mm	8570.00	12064.17
MB-Z1-180	VOLUME CONTROLLER	FR94 - 100mm	6130.00	11822.50
MB-Z1-181	MBSRE Ex-PROOF SPEAKER	FR94 - 100mm	6280.00	12400.00
MB-Z1-182	MBSRE 4W SPEAKER	FR97 - 50mm	9105.00	12064.17
MB-Z1-183	VOLUME CONTROLLER	FR93 + 65mm	2630.00	11822.50
MB-Z1-184	15W MBSRE SPEAKER	FR93 + 95mm	2430.00	12265.00
MB-Z1-185	VOLUME CONTROLLER	FR84 - 80mm	-3718.50	11822.50
MB-Z1-186	15W MBSRE SPEAKER	FR84 - 265mm	-3715.00	12400.00
MB-Z1-187	MBSRE 4W SPEAKER	FR81 - 250mm	-3655.00	12064.17
MB-Z1-188	MBSRE 4W SPEAKER	FR92 - 200mm	-8020.00	12064.17
MB-Z1-189	MBSRE 4W SPEAKER	FR95 - 300mm	-7285.00	12064.17
MB-Z1-190	MBSRE 4W SPEAKER	FR110 + 200mm	-6675.00	12064.17
MB-Z1-191	MBSRE 4W SPEAKER	FR125 + 200mm	-11190.00	12064.17
MB-Z1-192	MBSRE 4W SPEAKER	FR120 + 50mm	-820.00	12064.17
MB-Z1-193	MBSRE 4W SPEAKER	FR113 - 300mm	4055.00	12064.17
MB-Z1-194	MBSRE 4W SPEAKER	FR115 + 100mm	8650.00	12064.17
MB-Z1-195	MBSRE 4W SPEAKER	FR120 - 100mm	9450.00	12414.17
MB-Z1-197	MBSRE 4W SPEAKER	FR130 + 154mm	-637.11	12066.17
MB-Z1-198	VOLUME CONTROLLER	FR21 + 87.66mm	-817.00	8820.00
MB-Z1-199	15W MBSRE SPEAKER	FR21 + 235mm	-400.00	9700.00
MB-Z1-200	VOLUME CONTROLLER	FR7 - 88mm	-267.06	5952.50
MB-Z1-201	15W MBSRE SPEAKER	FR7 - 235mm	-50.00	6490.00

Name	Description	SHIP X	SHIP Y	SHIP Z
MB-Z1-202	MSBSRE FLASH LIGHT	FR21 + 220mm	-400.00	6310.00
MB-Z1-203	VOLUME CONTROLLER	FR64 - 250mm	-8073.25	8819.50
MB-Z1-204	15W MBSRE SPEAKER	FR65 + 66mm	-8318.11	9407.00
MB-Z1-205	VOLUME CONTROLLER	FR66 + 250mm	-8050.00	8906.50
MB-Z1-206	15W MBSRE SPEAKER	FR66 - 66mm	-7779.17	9590.79
MB-Z1-207	VOLUME CONTROLLER	FR49 - 60mm	-5795.00	9113.00
MB-Z1-208	15W MBSRE SPEAKER	FR47 - 60mm	-5595.00	9684.00
MB-Z1-209	VOLUME CONTROLLER	FR41 + 200mm	-4725.00	8707.00
MB-Z1-210	15W MBSRE SPEAKER	FR40 - 240mm	-4725.00	9434.00
MB-Z1-211	VOLUME CONTROLLER	FR53 + 90mm	3795.00	8650.00
MB-Z1-212	15W MBSRE SPEAKER	FR52 - 270mm	3745.00	9684.00
MB-Z1-213	VOLUME CONTROLLER	FR26 - 120mm	190.00	8819.50
MB-Z1-214	15W MBSRE SPEAKER	FR27 + 250mm	335.00	9300.00
MB-Z1-215	VOLUME CONTROLLER	FR22 + 12mm	3132.94	4022.50
MB-Z1-216	MBSRE Ex-PROOF SPEAKER	FR21 - 235mm	2050.00	5800.00
MB-Z1-217	VOLUME CONTROLLER	FR31 + 12mm	-1167.06	4022.50
MB-Z1-218	MBSRE Ex-PROOF SPEAKER	FR30 - 170mm	-500.00	5800.00
MB-Z1-219	VOLUME CONTROLLER	FR52 + 50mm	-2996.77	6169.58
MB-Z1-220	15W MBSRE SPEAKER	FR52 + 172mm	-2829.78	6607.00
MB-Z1-221	VOLUME CONTROLLER	FR52 + 50mm	2996.77	6119.58
MB-Z1-222	15W MBSRE SPEAKER	FR52 - 278mm	2739.78	6427.00
MB-Z1-223	VOLUME CONTROLLER	FR33 - 188mm	3688.23	6169.58
MB-Z1-224	15W MBSRE SPEAKER	FR33 - 258mm	3868.23	6734.58
MB-Z1-225	VOLUME CONTROLLER	FR33 - 188mm	-4718.23	6134.58
MB-Z1-226	15W MBSRE SPEAKER	FR33 - 258mm	-4698.23	6634.58
MB-Z1-227	VOLUME CONTROLLER	FR33 - 110mm	-5.00	3533.76
MB-Z1-228	15W MBSRE SPEAKER	FR34 + 10mm	-5.00	3983.76
MB-Z1-229	VOLUME CONTROLLER	FR43 - 217mm	6005.15	3633.76
MB-Z1-230	15W MBSRE SPEAKER	FR43 - 31mm	5487.96	3783.76
MB-Z1-231	VOLUME CONTROLLER	FR52 - 185mm	-205.00	3583.76
MB-Z1-232	15W MBSRE SPEAKER	FR52 + 250mm	-5.00	3883.76
MB-Z1-233	VOLUME CONTROLLER	FR45 + 243mm	-6517.71	3433.76
MB-Z1-234	15W MBSRE SPEAKER	FR45 + 221mm	-6389.68	3883.76
MB-Z1-235	MSBSRE FLASH LIGHT	FR44 + 273mm	-36.00	6334.00
MB-Z1-236	MSBSRE FLASH LIGHT	FR51 - 85mm	-5.00	4133.76
MB-Z1-237	VOLUME CONTROLLER	FR64 - 100mm	5900.00	8906.50
MB-Z1-238	15W MBSRE SPEAKER	FR65 + 297mm	5694.95	9598.69
MB-Z1-239	VOLUME CONTROLLER	FR64 - 50mm	6200.00	8819.50
MB-Z1-240	15W MBSRE SPEAKER	FR64 + 97mm	6369.95	9298.69
MB-Z1-241	VOLUME CONTROLLER	FR80 - 245mm	6050.00	7819.50
MB-Z1-242	15W MBSRE SPEAKER	FR79 + 105mm	6300.00	8807.00
MB-Z1-243	VOLUME CONTROLLER	FR73 - 155mm	4855.00	7819.50
MB-Z1-244	15W MBSRE SPEAKER	FR74 + 295mm	4705.00	8275.00
MB-Z1-245	VOLUME CONTROLLER	FR79 - 95mm	-7305.00	7819.50
MB-Z1-246	15W MBSRE SPEAKER	FR79 - 105mm	-7095.00	8275.00
MB-Z1-247	VOLUME CONTROLLER	FR84 + 175mm	-8610.00	7819.50
MB-Z1-248	15W MBSRE SPEAKER	FR83 + 75mm	-9005.00	8275.00
MB-Z1-249	VOLUME CONTROLLER	FR83 - 183mm	-5524.86	4007.00
MB-Z1-250	15W MBSRE SPEAKER	FR83 + 167mm	-5974.86	4657.00
MB-Z1-251	VOLUME CONTROLLER	FR73 - 83mm	7725.14	4107.00

Name	Description	SHIP X	SHIP Y	SHIP Z
MB-Z1-252	15W MBSRE SPEAKER	FR73 - 283mm	7675.14	4807.00
MB-Z1-253	VOLUME CONTROLLER	FR72 - 271mm	5306.00	5889.66
MB-Z1-254	15W MBSRE SPEAKER	FR72 - 46mm	5306.00	6189.66
MB-Z1-255	VOLUME CONTROLLER	FR53 - 79mm	4886.00	6289.66
MB-Z1-256	15W MBSRE SPEAKER	FR54 + 296mm	4936.00	6639.66
MB-Z1-257	VOLUME CONTROLLER	FR53 - 79mm	-5951.00	5994.66
MB-Z1-258	15W MBSRE SPEAKER	FR54 + 296mm	-5336.00	6639.66
MB-Z1-259	VOLUME CONTROLLER	FR72 - 21mm	-6006.00	5939.66
MB-Z1-260	15W MBSRE SPEAKER	FR72 + 154mm	-6006.00	6089.66
MB-Z1-261	VOLUME CONTROLLER	FR73 + 175mm	-5038.00	3960.00
MB-Z1-262	15W MBSRE SPEAKER	FR72 - 236mm	-5332.00	3965.00
MB-Z1-263	VOLUME CONTROLLER	FR53 - 75mm	-1218.00	4200.00
MB-Z1-264	15W MBSRE SPEAKER	FR54 + 286mm	-1818.00	4250.00
MB-Z1-265	VOLUME CONTROLLER	FR53 - 75mm	1518.00	4150.00
MB-Z1-266	15W MBSRE SPEAKER	FR54 + 286mm	1818.00	4150.00
MB-Z1-267	VOLUME CONTROLLER	FR73 + 225mm	5793.00	3700.00
MB-Z1-268	15W MBSRE SPEAKER	FR72 - 236mm	5318.00	3950.00
MB-Z1-269	MSBSRE FLASH LIGHT	FR53 - 200mm	0.00	6450.00
MB-Z1-270	MSBSRE FLASH LIGHT	FR71 - 210mm	-3.00	3825.93
MB-Z1-271	VOLUME CONTROLLER	FR84 - 220mm	3801.86	7720.25
MB-Z1-272	15W MBSRE SPEAKER	FR85 + 248mm	4028.14	8720.00
MB-Z1-273	VOLUME CONTROLLER	FR84 - 170mm	-1700.00	7670.25
MB-Z1-274	15W MBSRE SPEAKER	FR85 + 248mm	-1528.14	8720.25
MB-Z1-275	VOLUME CONTROLLER	FR105 + 80mm	-4748.14	7920.25
MB-Z1-276	15W MBSRE SPEAKER	FR105 + 280mm	-4278.14	8420.25
MB-Z1-277	VOLUME CONTROLLER	FR103 - 20mm	5351.86	7820.25
MB-Z1-278	15W MBSRE SPEAKER	FR105 + 280mm	3171.86	8520.25
MB-Z1-279	VOLUME CONTROLLER	FR105 + 92mm	575.14	4107.00
MB-Z1-280	15W MBSRE SPEAKER	FR104 - 136mm	659.10	5000.00
MB-Z1-281	VOLUME CONTROLLER	FR105 + 92mm	-5674.86	4022.50
MB-Z1-282	15W MBSRE SPEAKER	FR104 - 283mm	-5574.86	4610.00
MB-Z1-283	VOLUME CONTROLLER	FR84 - 58mm	-3975.14	4022.50
MB-Z1-284	15W MBSRE SPEAKER	FR84 - 283mm	-3975.14	4610.00
MB-Z1-285	VOLUME CONTROLLER	FR84 - 58mm	3975.14	4022.50
MB-Z1-286	15W MBSRE SPEAKER	FR84 - 283mm	3975.14	4610.00
MB-Z1-287	MSBSRE FLASH LIGHT	FR105 + 208mm	-1805.18	5358.05
MB-Z1-288	VOLUME CONTROLLER	FR105 - 260mm	556.00	7819.50
MB-Z1-289	15W MBSRE SPEAKER	FR106 + 100mm	556.00	8350.00
MB-Z1-290	VOLUME CONTROLLER	FR118 + 17mm	11010.00	7753.54
MB-Z1-291	15W MBSRE SPEAKER	FR118 - 5mm	10790.68	8418.90
MB-Z1-292	VOLUME CONTROLLER	FR125 - 87mm	-970.00	8157.00
MB-Z1-293	15W MBSRE SPEAKER	FR125 + 63mm	-730.00	8307.00
MB-Z1-294	VOLUME CONTROLLER	FR119 - 205mm	-11240.68	7613.90
MB-Z1-295	15W MBSRE SPEAKER	FR120 - 5mm	-10795.68	8551.40
MB-Z1-296	VOLUME CONTROLLER	FR125 - 24mm	-3325.00	4518.94
MB-Z1-297	15W MBSRE SPEAKER	FR125 + 212mm	-3000.00	5000.00
MB-Z1-298	VOLUME CONTROLLER	FR125 + 167mm	3025.00	4212.50
MB-Z1-299	15W MBSRE SPEAKER	FR125 + 212mm	3000.00	4543.65
MB-Z1-300	VOLUME CONTROLLER	FR106 - 20mm	3667.00	4368.94
MB-Z1-301	15W MBSRE SPEAKER	FR106 + 203mm	4447.00	5000.00

SHIP NO :11190-91
DRG. NO. :80304F
SHEET NO :13

Name	Description	SHIP X	SHIP Y	SHIP Z
MB-Z1-302	VOLUME CONTROLLER	FR106 + 35mm	-2970.00	4368.94
MB-Z1-303	15W MBSRE SPEAKER	FR106 - 215mm	-2975.00	4857.00
MB-Z1-304	MSBSRE FLASH LIGHT	FR114 + 295mm	-6399.32	8718.91
MB-Z1-305	MSBSRE FLASH LIGHT	FR106 + 262mm	1500.00	5043.65
MB-Z1-306	VOLUME CONTROLLER	FR126 - 105mm	-1230.00	7819.50
MB-Z1-307	15W MBSRE SPEAKER	FR126 - 300mm	-1230.00	8607.00
MB-Z1-308	VOLUME CONTROLLER	FR132 - 25mm	-5680.00	7819.50
MB-Z1-309	15W MBSRE SPEAKER	FR132	-5530.00	8607.00
MB-Z1-310	VOLUME CONTROLLER	FR134 + 5mm	-11030.00	7820.50
MB-Z1-311	15W MBSRE SPEAKER	FR135 + 125mm	-10930.00	8608.00
MB-Z1-312	VOLUME CONTROLLER	FR143 - 75mm	-5330.00	7820.50
MB-Z1-313	15W MBSRE SPEAKER	FR143 - 225mm	-7930.00	8396.71
MB-Z1-314	VOLUME CONTROLLER	FR139 + 45mm	11170.00	7819.50
MB-Z1-315	15W MBSRE SPEAKER	FR139 + 200mm	10970.00	8607.00
MB-Z1-316	VOLUME CONTROLLER	FR147 - 212mm	4695.00	4750.00
MB-Z1-317	15W MBSRE SPEAKER	FR147 - 238mm	5100.00	5350.00
MB-Z1-318	VOLUME CONTROLLER	FR147 - 212mm	-4709.00	4750.00
MB-Z1-319	15W MBSRE SPEAKER	FR147 - 238mm	-5114.00	5350.00
MB-Z1-320	VOLUME CONTROLLER	FR126 - 62mm	-4159.00	4550.00
MB-Z1-321	15W MBSRE SPEAKER	FR126 - 288mm	-3864.00	4861.00
MB-Z1-322	VOLUME CONTROLLER	FR126 - 62mm	2695.00	4950.00
MB-Z1-323	15W MBSRE SPEAKER	FR126 - 288mm	3050.00	4950.00
MB-Z1-324	MSBSRE FLASH LIGHT	FR138 - 207mm	7.00	9184.00
MB-Z1-325	MSBSRE FLASH LIGHT	FR126 - 188mm	-250.00	4950.00
MB-Z1-326	MBSRE 4W SPEAKER	FR91 + 110mm	-6858.14	8263.17
MB-Z1-327	MBSRE 4W SPEAKER	FR149 - 300mm	-1700.00	8063.17
MB-Z1-328	MBSRE 4W SPEAKER	FR159 - 50mm	-8850.00	8463.17
MB-Z1-329	MBSRE 4W SPEAKER	FR161 - 80mm	-8900.00	9364.17
MB-Z1-330	MBSRE 4W SPEAKER	FR163 - 200mm	-3000.00	9064.17
MB-Z1-331	MBSRE 4W SPEAKER	FR170 - 100mm	-1682.00	9064.17
MB-Z1-332	VOLUME CONTROLLER	FR172 - 100mm	5975.00	8650.00
MB-Z1-333	15W MBSRE SPEAKER	FR172 - 250mm	5475.00	9400.00
MB-Z1-334	VOLUME CONTROLLER	FR172 - 100mm	-5325.00	8650.00
MB-Z1-335	15W MBSRE SPEAKER	FR172 - 250mm	-4075.00	9400.00
MB-Z1-336	VOLUME CONTROLLER	FR160 - 100mm	-3018.50	5902.50
MB-Z1-337	15W MBSRE SPEAKER	FR161 + 145mm	-3016.95	6490.00
MB-Z1-338	VOLUME CONTROLLER	FR160 - 100mm	3018.50	5902.50
MB-Z1-339	15W MBSRE SPEAKER	FR161 + 145mm	3016.95	6490.00
MB-Z1-340	MSBSRE FLASH LIGHT	FR161 + 5mm	0.00	6476.12
MB-Z2-05	MBSRE 4W SPEAKER	FR32 - 120mm	-4575.00	29912.17
MB-Z2-06	MBSRE 4W SPEAKER	FR32 - 120mm	4420.00	29912.17
MB-Z2-07	VOLUME CONTROLLER	FR32 - 250mm	4500.00	29669.50
MB-Z2-08	15W MBSRE SPEAKER	FR30 + 40mm	5995.00	30940.00
MB-Z2-09	VOLUME CONTROLLER	FR39 - 215mm	9180.00	29669.50
MB-Z2-10	15W MBSRE SPEAKER	FR42 + 200mm	12055.00	30940.00
MB-Z2-11	VOLUME CONTROLLER	FR59 - 5mm	6400.00	29669.50
MB-Z2-12	15W MBSRE SPEAKER	FR63 - 200mm	7845.00	30940.00
MB-Z2-13	VOLUME CONTROLLER	FR67 - 300mm	0.00	29669.50
MB-Z2-14	15W MBSRE SPEAKER	FR70 - 50mm	0.00	30940.00
MB-Z2-15	VOLUME CONTROLLER	FR59 - 5mm	-6400.00	29669.50

Name	Description	SHIP X	SHIP Y	SHIP Z
MB-Z2-16	15W MBSRE SPEAKER	FR63 - 200mm	-7845.00	30940.00
MB-Z2-17	VOLUME CONTROLLER	FR39 - 215mm	-9180.00	29669.50
MB-Z2-18	15W MBSRE SPEAKER	FR42 + 200mm	-12055.00	30940.00
MB-Z2-19	VOLUME CONTROLLER	FR32 - 250mm	-4500.00	29669.50
MB-Z2-20	15W MBSRE SPEAKER	FR30 + 40mm	-5995.00	30940.00
MB-Z2-21	MBSRE 4W SPEAKER	FR29 - 165mm	393.66	26662.17
MB-Z2-22	VOLUME CONTROLLER	FR29 + 150mm	7785.00	26500.00
MB-Z2-23	15W MBSRE SPEAKER	FR29 - 150mm	7725.00	27625.00
MB-Z2-24	VOLUME CONTROLLER	FR71 - 100mm	7785.00	26500.00
MB-Z2-25	15W MBSRE SPEAKER	FR74 - 300mm	7785.00	27625.00
MB-Z2-26	VOLUME CONTROLLER	FR71 - 100mm	-7785.00	26500.00
MB-Z2-27	15W MBSRE SPEAKER	FR74 - 300mm	-7785.00	27625.00
MB-Z2-28	VOLUME CONTROLLER	FR29 + 150mm	-7725.00	26500.00
MB-Z2-29	15W MBSRE SPEAKER	FR29 - 150mm	-7725.00	27625.00
MB-Z2-30	VOLUME CONTROLLER	FR130 - 93mm	-2115.92	17819.50
MB-Z2-31	15W MBSRE SPEAKER	FR133 + 250mm	1890.00	19230.00
MB-Z2-32	VOLUME CONTROLLER	FR98 - 300mm	-4310.00	17820.00
MB-Z2-33	15W MBSRE SPEAKER	FR98 + 50mm	-4460.00	18400.00
MB-Z2-34	VOLUME CONTROLLER	FR74 - 100mm	-3339.89	23707.00
MB-Z2-35	15W MBSRE SPEAKER	FR76 - 250mm	-6415.00	24200.00
MB-Z2-36	VOLUME CONTROLLER	FR74 - 100mm	3339.89	23707.00
MB-Z2-37	15W MBSRE SPEAKER	FR76 - 250mm	6415.00	24200.00
MB-Z2-38	VOLUME CONTROLLER	FR25 + 100mm	4239.89	20819.50
MB-Z2-39	15W MBSRE SPEAKER	FR23 + 250mm	6765.00	22085.00
MB-Z2-40	VOLUME CONTROLLER	FR25 + 100mm	-4239.89	20819.50
MB-Z2-41	15W MBSRE SPEAKER	FR23 + 250mm	-6765.00	22085.00
MB-Z2-42	VOLUME CONTROLLER	FR68 - 50mm	9100.00	14829.50
MB-Z2-43	15W MBSRE SPEAKER	FR69 + 75mm	9295.00	15400.00
MB-Z2-44	VOLUME CONTROLLER	FR18 + 100mm	6298.00	17820.50
MB-Z2-45	15W MBSRE SPEAKER	FR18 + 295mm	5548.00	18750.00
MB-Z2-46	VOLUME CONTROLLER	FR18 + 100mm	-4648.00	17820.50
MB-Z2-47	15W MBSRE SPEAKER	FR18 + 295mm	-5548.00	18750.00
MB-Z2-48	VOLUME CONTROLLER	FR41 + 280mm	-9130.00	14829.50
MB-Z2-49	15W MBSRE SPEAKER	FR40 + 200mm	-9305.00	15400.00
MB-Z2-50	VOLUME CONTROLLER	FR76 - 100mm	8210.00	14829.50
MB-Z2-51	15W MBSRE SPEAKER	FR76 - 275mm	7910.00	15400.00
MB-Z2-52	VOLUME CONTROLLER	FR99 - 250mm	4285.00	14829.50
MB-Z2-53	15W MBSRE SPEAKER	FR99 + 200mm	4460.00	15600.00
MB-Z2-54	VOLUME CONTROLLER	FR107 - 180mm	-50.00	14829.50
MB-Z2-55	15W MBSRE SPEAKER	FR108 + 250mm	-300.00	15400.00
MB-Z2-56	VOLUME CONTROLLER	FR114 + 100mm	-4835.00	14829.50
MB-Z2-57	15W MBSRE SPEAKER	FR113 - 300mm	-7100.00	15590.00
MB-Z2-58	VOLUME CONTROLLER	FR101 + 250mm	-4285.00	14829.50
MB-Z2-59	15W MBSRE SPEAKER	FR100	-4460.00	15650.00
MB-Z2-60	VOLUME CONTROLLER	FR126 - 100mm	-8305.00	11822.50
MB-Z2-61	15W MBSRE SPEAKER	FR127 + 250mm	-8890.00	13010.00
MB-Z2-62	VOLUME CONTROLLER	FR130 - 75mm	-3055.00	11822.50
MB-Z2-63	15W MBSRE SPEAKER	FR133 - 275mm	-2240.00	13160.00
MB-Z2-64	MBSRE 4W SPEAKER	FR139	0.00	12066.17
MB-Z2-65	VOLUME CONTROLLER	FR130 - 75mm	3055.00	11822.50

Name	Description	SHIP X	SHIP Y	SHIP Z
MB-Z2-66	15W MBSRE SPEAKER	FR133 - 275mm	2240.00	13160.00
MB-Z2-67	VOLUME CONTROLLER	FR130 - 75mm	7655.00	11822.50
MB-Z2-68	15W MBSRE SPEAKER	FR132 - 275mm	8540.00	13160.00

SHIP NO :11190-91
DRG. NO. :80304F
SHEET NO :14

Name	Description	SHIP X	SHIP Y	SHIP Z
MBSRE MULTIWAY JB-1	MBSRE JUNCTION BOX	FR38 + 294mm	-3300.00	26506.00
MBSRE MULTIWAY JB-2	MBSRE JUNCTION BOX	FR45 - 109mm	-1337.24	18411.07
MBSRE MULTIWAY JB-3	MBSRE JUNCTION BOX	FR43 + 155mm	-900.00	12300.00
MBSRE MULTIWAY JB-4	MBSRE JUNCTION BOX	FR53 + 280mm	-4199.32	9281.50
MBSRE MULTIWAY JB-5	MBSRE JUNCTION BOX	FR72 - 20mm	2900	8930
MBSRE MULTIWAY JB-6	MBSRE JUNCTION BOX	FR85 + 142mm	-6905.00	7700.03
MBSRE MULTIWAY JB-7	MBSRE JUNCTION BOX	FR36 - 256mm	-2650.00	26456.00
MBSRE SWITCH A	MBSRE NETWORK SWITCH	FR37 + 295mm	2057.04	26942.95
MBSRE SWITCH B	MBSRE NETWORK SWITCH	FR37 + 295mm	1557.04	26942.95
MBSRE SWITCH C	MBSRE NETWORK SWITCH	FR43 + 147mm	1435.00	18457.07
MBSRE SWITCH D	MBSRE NETWORK SWITCH	FR80 + 200mm	5850.00	12520.00
MBSRE CENTRAL CONTROL UNIT		FR39 + 70mm	-2486.00	26250.00
MBSRE OUTPUT RACK		FR41 + 270mm	-2486.00	26250.00
MBSRE UPS 6KVA		FR37 - 109mm	-2920.00	25532.00
MB-20Z1-5-1	Announcement station	FR124 + 21mm	-3888.00	12092.50
MB-20Z1-5-2	Announcement station	FR120 + 74mm	-742.45	11716.50
MB-02Z2-5-2	Announcement station	FR38 + 137mm	-9087.00	14833.50
MB-02Z1-5-2	Announcement station	FR18 + 100mm	-3756.00	17734.50
MB-04Z1-5-1	Announcement station	FR62 - 143mm	1970.00	23533.84
MB-05Z1-5-1	Announcement station	FR38 + 255mm	-4930.00	26335.00
MB-05Z1-5-2	Announcement station	FR30 + 281mm	0.15	26433.50
MB-06Z1-5-1	Announcement station	FR36 + 136mm	-2916.00	29042.00
MB-06Z1-5-2	Announcement station	FR43 + 34mm	-146.00	29657.47
MB/SRE MDB		FR39 + 147mm	-3732.93	26700.00
MB/SRE PDB-1		FR37 - 253mm	-3732.93	26200.00
MB/SRE PDB-2		FR37 - 253mm	-3732.93	26700.00
MB/SRE PDB-3		FR39 + 147mm	-3732.93	26200.00